INIC-1618
USB to SATA Bridge
Specification

Datasheet
Version 1.04
July 2, 2010

Revision History

Revision	Date	Comments
V1.00	11/12/2009	Initial Release
V1.01	12/22/2009	1. Correct 3.3V to 1.2V LDO voltage value. 2. Correct ROM and buffer size in block diagram.
V1.02	02/19/2010	1. Support QFN 40pin 2. Update DC characteristic
V1.03	06/04/2010	Remove Punch type package.
V1.04	07/02/2010	Correct pin description for P3.4, P1.7 and P1.3.

Table of Contents

1 Introduction

The INIC-1618 provides an advanced solution to connect SATA devices to USB Host with integrated CPU and embedded SRAM/ROM. To provide high performance and cost effective solution, the INIC-1618 integrates USB-PHY, Mass Storage Class Bulk-Only USB function, SATA link/PHY core and microprocessor into a single ASIC. The INIC-1618 provides the data transfer rate of up to 60 MB/sec connecting to a 1.5G SATA interface.

1.1 Feature Summary

- Integrates USB2.0 PHY IP core.
- Data transfer rate of up to 60 MB/sec.
- Integrated internal Turbo 8051 uP with 16KB embedded ROM and 4KB SRAM.
- External NVRAM supported.
- Support HID.
- Up to 11 GPIO pins.
- Only one external crystal.
- Supports SATA (bridged SATA) Hard Disk drives, CD-RW devices, DVDs, Removable media devices, BD (Blu-Ray Disc) drive
- USB 1.1 and USB 2.0 compliant.
- USB Mass Storage Class Bulk-Only Transport Specification Compliant.
- SATA specification 1.0, SATA II Compliant (Hot Plug is supported).
- Support ATA/ATAPI device DMA and PIO mode.
- Support SATA BIST through USB and SATA bus
- 4k bytes of data buffer for data transfer.
- Support tri-state on SATA Tx/Rx ports
- On-Chip 3.3V to 1.2V regulator and 5V to 3.3V regulator.
- 48 pin LQFP or 40 pin QFN package

1.2 Firmware/Software Support

- USB Mass Storage Class Bulk-Only Transport support
- Provide software utilities for NVRAM upgraded.

1.3 Devices Support

- Hard disk drives
- CD-RW devices
- DVDs
- Removable media devices
- Blu-Ray Disk driver

2 INIC-1618 Block Diagram

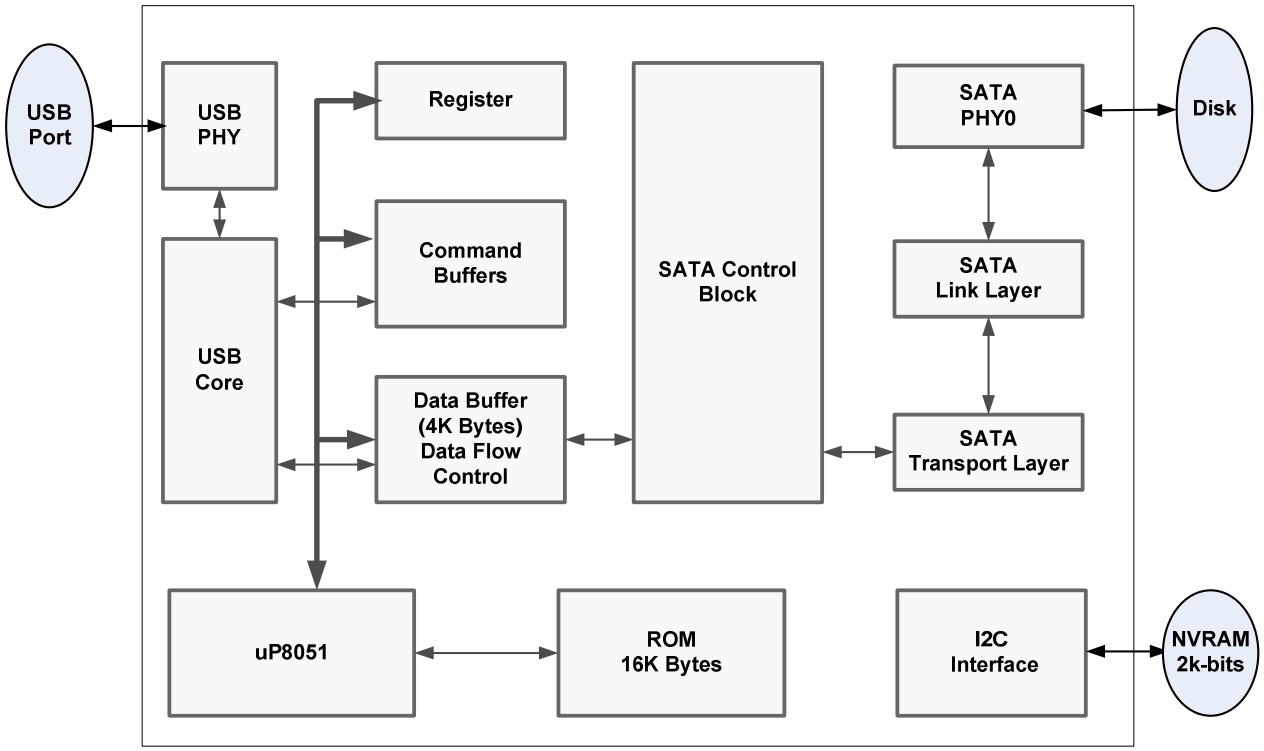

Figure1: USB to SATA Bridge Block Diagram

3 Pin-Out Diagram

3.1 LQFP 48-Pin

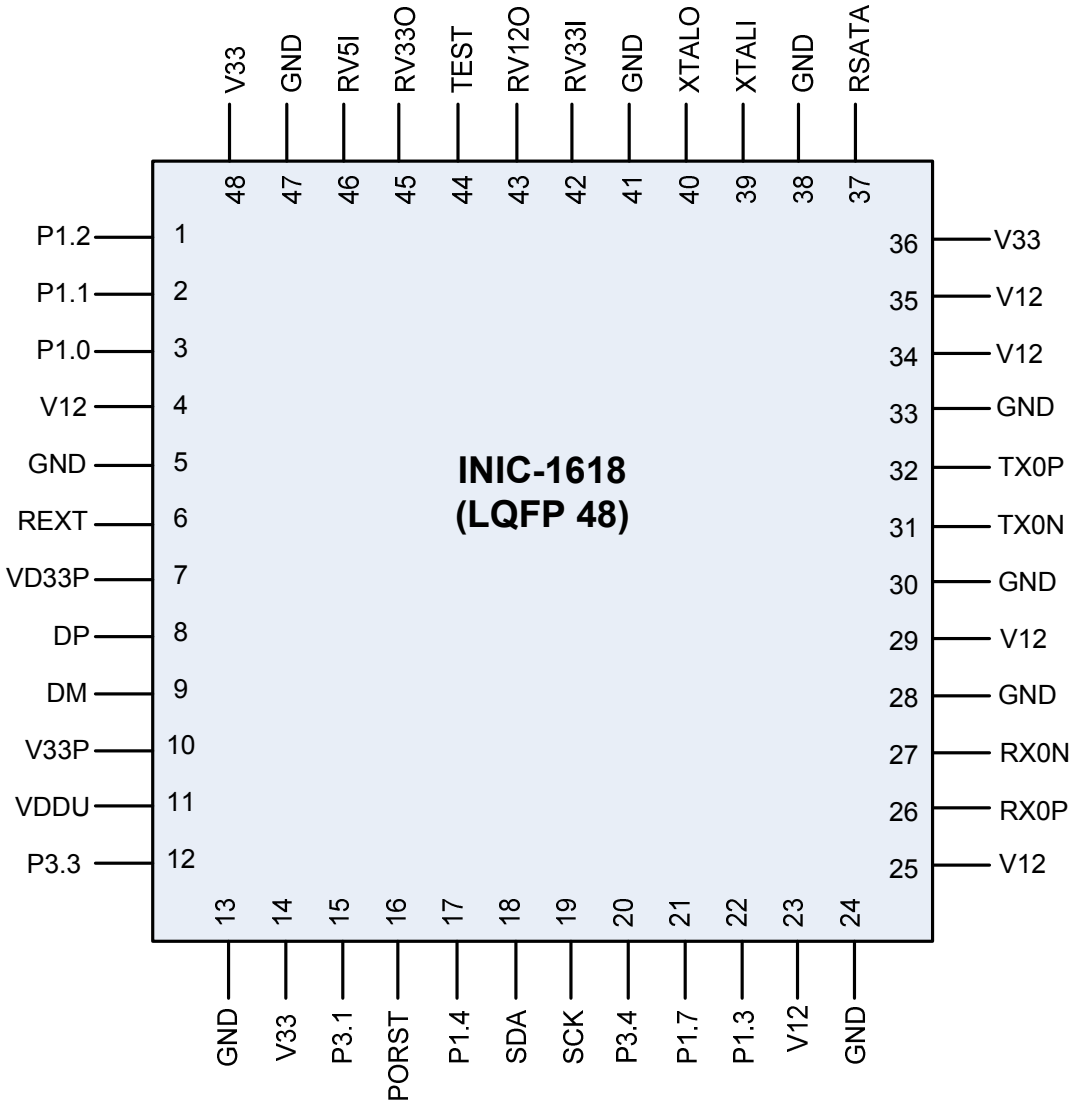

3.2 QFN 40-Pin

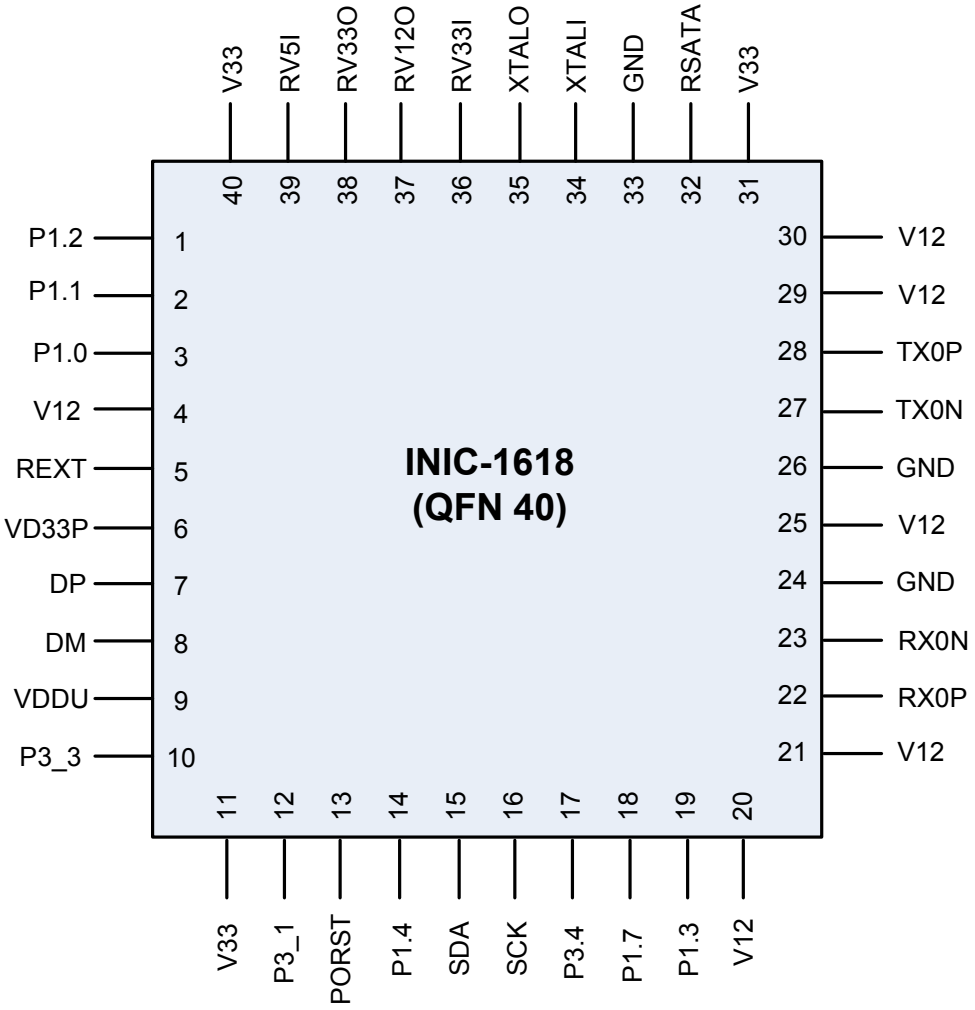
INIC-1618
(QFN 40)
1 P1.2
2 P1.1
3 P1.0
4 V12
5 REXT
6 VD33P
7 DP
8 DM
9 VDDU
10 P3_3
11 V33
12 P3_1
13 PORST
14 P1.4
15 SDA
16 SCK
17 P3.4
18 P1.7
19 P1.3
20 V12
21 V12
22 RX0P
23 RX0N
24 GND
25 V12
26 GND
27 TX0N
28 TX0P
29 V12
30 V12
31 V33
32 RSATA
33 GND
34 XTALI
35 XTALO
36 RV33I
37 RV12O
38 RV33O
39 RV5I
40 V33

4 Pin Signal Description:

4.1 48-Pin LQFP Package

4.1.1 USB Interface

Signal Name	Pin Number	I/O	Driver Type	Description
DP	8	I/O	USB high /full speed buffer (D+)	High/Full speed D+ signal
DM	9	I/O	USB high/full speed buffer (D-)	High/Full speed D- signal
REXT_USB	6	A	Power	PLL voltage reference. Current source for 1K ohm(1%) resistor connected to AVSS

4.1.2 SATA Interface (Analog pins)

Signal Name	Pin Number	I/O	Driver Type	Description
TX0P (SATA Device)	32	O	SATA	Differential Transmit positive signal line
TX0N (SATA Device)	31	O	SATA	Differential Transmit negative signal line
RX0P (SATA Device)	26	I	SATA	Differential Receive positive signal line
RX0N (SATA Device)	27	I	SATA	Differential Receive negative signal line
XTALI	39	I	PX1R	crystal oscillator input (25MHz)
XTALO	40	O		Crystal oscillator output
RSATA	37	I		External Reference Resister (1K ohm 1%)

4.1.3 System Interface

Signal Name	Pin Number	I/O	Driver Type	Description
PORST	16	I	Schmitt-trigger	Power On Reset. Active low

4.1.4 NVRAM Interface

Signal Name	Pin Number	I/O	Driver Type	Description
SDA	18	I/O	Internal pullup 40Kohm- 120Kohm	NRAM data input/output.
SCK	19	I/O	Internal pullup 40Kohm-120Kohm	NVRAM clock.

4.1.5 GPIO Interface

Signal Name	Pin Number	I/O	Driver Type	Description
LED/P3.1	15	I/O	Internal pullup 40Kohm—120Kohm	LED: SATA Activity indicator. Can be used as uP8051 port P3.1
P3.3/VBUS	12	I/O	Schmitt-trigger	uP8051 I/O port 3.3, can be used as VBUS detection
P1.4	17	I/O	Internal pullup 40Kohm—120Kohm	uP8051 I/O port 1.4, can be used as GPIOs **OTB input if enable OTB**
P1.2	1	I/O	Internal pullup 40Kohm—120Kohm	uP8051 I/O port 1.2, can be used as output GPIO
P1.1	2	I/O	Internal pullup 40Kohm—120Kohm	uP8051 I/O port 1.2, can be used as output GPIO
P1.0	3	I/O	Internal pullup 40Kohm—120Kohm	uP8051 I/O port 1.0, can be used as GPIO
P3.4	20	I/O	Internal pullup 40Kohm—120Kohm	uP8051 I/O port P3.4, can be used as GPIO
P1.7	21	I/O	Internal pullup 40Kohm—120Kohm	uP8051 I/O port P1.7, can be used as GPIO
P1.3	22	I/O	Internal pullup 40Kohm—120Kohm	uP8051 I/O port P1.3, can be used as GPIO
TestMode	44	I	Input:internal pull down 40K-120Kohm	Test mode selection 0: Normal mode (default) 1: Test mode

4.1.6 Power Regulator pins

Signal Name	Pin Number	I/O	Driver Type	Description
RV33I	42	I		REG 3.3V input
RV12O	43	O		REG 1.2V output
GND	41	I		Ground for 2 Regulators
RV5I	46	I		REG 5V input.
RV33O	45	O		REG 3.3V output

4.1.7 Power/GND

Signal Name	Pin Number	I/O	Driver Type	Description
V33	14,48			2 pins (Digital 3.3V) for core
V12	4,23			2 pins (Digital 1.2V) for core
GND	5,13,24,47			4 pins
VD33P	7			For USB (3.3V)
VS33P	10			For USB (GND)
VDDU	11			For USB (1.2V)
V33	36			For SATA(3.3V)
V12	25,29,34,35			For SATA(1.2V)
GND	28,30,33,38			For SATA(GND)

4.2 40-Pin QFN Package

4.2.1 USB Interface

Signal Name	Pin Number	I/O	Driver Type	Description
DP	7	I/O	USB high /full speed buffer (D+)	High/Full speed D+ signal
DM	8	I/O	USB high/full speed buffer (D-)	High/Full speed D- signal
REXT_USB	5	A	Power	PLL voltage reference. Current source for 1K ohm(1%) resistor connected to AVSS

4.2.2 SATA Interface (Analog pins)

Signal Name	Pin Number	I/O	Driver Type	Description
TX0P (SATA Device)	28	O	SATA	Differential Transmit positive signal line
TX0N (SATA Device)	27	O	SATA	Differential Transmit negative signal line
RX0P (SATA Device)	22	I	SATA	Differential Receive positive signal line
RX0N (SATA Device)	23	I	SATA	Differential Receive negative signal line
XTALI	34	I	PX1R	crystal oscillator input (25MHz)
XTALO	35	O		Crystal oscillator output
RSATA	32	I		External Reference Resister (1K ohm 1%)

4.2.3 System Interface

Signal Name	Pin Number	I/O	Driver Type	Description
PORST	13	I	Schmitt-trigger	Power On Reset. Active low

4.2.4 NVRAM Interface

Signal Name	Pin Number	I/O	Driver Type	Description
SDA	15	I/O	Internal pullup 40Kohm- 120Kohm	NRAM data input/output.
SCK	16	I/O	Internal pullup 40Kohm-120Kohm	NVRAM clock.

4.2.5 GPIO Interface

Signal Name	Pin Number	I/O	Driver Type	Description
LED/P3.1	12	I/O	Internal pullup 40Kohm—120Kohm	LED: SATA Activity indicator. Can be used as uP8051 port P3.1
P3.3/VBUS	10	I/O	Schmitt-trigger	uP8051 I/O port 3.3, can be used as VBUS detection
P1.4	14	I/O	Internal pullup 40Kohm—120Kohm	uP8051 I/O port 1.4, can be used as GPIOs **OTB input if enable OTB**
P1.2	1	I/O	Internal pullup 40Kohm—120Kohm	uP8051 I/O port 1.2, can be used as output GPIO
P1.1	2	I/O	Internal pullup 40Kohm—120Kohm	uP8051 I/O port 1.2, can be used as output GPIO
P1.0	3	I/O	Internal pullup 40Kohm—120Kohm	uP8051 I/O port 1.0, can be used as GPIOs
P3.4	17	I/O	Internal pullup 40Kohm—120Kohm	uP8051 I/O port P3.4, can be used as GPIO
P1.7	18	I/O	Internal pullup 40Kohm—120Kohm	uP8051 I/O port P1.7, can be used as GPIO
P1.3	19	I/O	Internal pullup 40Kohm—120Kohm	uP8051 I/O port P1.3, can be used as GPIO

4.2.6 Power Regulator pins

Signal Name	Pin Number	I/O	Driver Type	Description
RV33I	36	I		REG 3.3V input
RV12O	37	O		REG 1.2V output
RV5I	39	I		REG 5V input.
RV33O	38	O		REG 3.3V output

4.2.7 Power/GND

Signal Name	Pin Number	I/O	Driver Type	Description
V33	11,40			2 pins (Digital 3.3V) for core
V12	4,20			2 pins (Digital 1.2V) for core
VD33P	6			For USB (3.3V)
VDDU	9			For USB (1.2V)
V33	31			For SATA(3.3V)
V12	21,25,29,30			For SATA(1.2V)
GND	24,26,33			For SATA(GND)

5 Electrical Information:

5.1 Absolute Maximum Ratings

Symbol	Parameter	Min	Max	Units
Vcc50	5V Power Supply	4.5	5.5	V
Vcc	Power Supply	-0.3	3.6	V
Vin	Input Voltage	-0.3	Vcc+0.3	V
Vout	Output Voltage	-0.3	Vcc+0.3	V
Tstg	Storage Temperature	-55	150	°C

5.2 Recommended Operating Conditions

Symbol	Parameter	Min	Typ	Max	Units
Vcc50	5V Power Supply	4.5	5.0	5.5	V
Vcc	Power Supply	3.0	3.3	3.6	V
Vin	Input Voltage	0	-	Vcc	V
Tj	Commercial Junction Operating Temperature	0	25	115	°C

5.3 General DC Characteristics

Symbol	Parameter	Min	Typ	Max	Units
Iil	Input Leakage Current	-1		1	µA
Ioz	Tristate Leakage Current	-1		1	µA
Cin	Input Capacitance		2.8		pF
Cout	Output Capacitance	2.7		4.9	pF
Cbid	Bi-directional Buffer Capacitance	2.7		4.9	pF

5.4 DC Electrical Characteristics for 3.3V Operation

Symbol	Parameter	Conditions	Min	Typ	Max	Units
Vil	Input Low Voltage	CMOS	-0.3		0.8	V
Vih	Input High Voltage	CMOS	2.0		5.5	V
Vt	Threshold point		1.34	1.4	1.5	V
Vt+	Schmitt trigger Low to High threshold		1.52	1.61	1.69	V
Vt-	Schmitt trigger High to Low threshold		1.12	1.19	1.30	V
Vol	Output Low Voltage	Iol= 2-24mA			0.4	V
Voh	Output High Voltage	Ioh=2-24mA	2.4			V
I_{OL}	Low level output current	4mA I/O, Vol=0.4V	4.4	7.4	9.2	mA
		10mA I/O, Vol=0.4V	10.3	12.3	13.9	mA
		20mA I/O Vol=0.4V	8.4	10.5	12.6	mA
		20mA I/O Vol=0.8V	16.0	20.0	24.0	mA
I_{OH}	High level output current	4mA I/O Voh=2.4V	4.6	8.3	13.4	mA
		10mA I/O Voh=2.4V	9.2	16.6	26.8	mA
		20mA I/O Voh=2.4V	18.4	33.2	53.6	mA
Ri	Input Pullup Resistance	Vil=0/ Vih=Vcc	100		780	kΩ
Ri	Input Pulldown Resistance	Vil=0/ Vih=Vcc	100		476	kΩ

Icc	Operating Supply Current	Vcc=3.3V			90	mA

5.5 DC Specification for LDO 5V to 3.3V Regulator

Parameter	Condition	Min	Typ	Max	Units
Input voltage range		4.0	5.0	5.5	V
Output voltage range	1mA < I_{LOAD} < 280mA	3.135	3.3	3.465	V
Max output current				280	mA
Load regulation	I_{LOAD} = 1mA to 280mA		5		mV
Input ripple rejection	V_{RIPPLE}=0.5V_{P-P} , I_{LOAD}=250mA, F_{RIPPLE}=120Hz F_{RIPPLE}=1MHz		 80 45		 dB dB
Output voltage noise	C_{OUT}=10uF, I_{LOAD}=250mA, BW=10Hz to 100kHz		150		μV_{rms}
Quiescent current	Power down mode			10	uA
Current limiting	Output short to ground		400		mA

5.6 DC Electrical Specification for 3.3V to 1.2V Regulator

Parameter	Condition	Min	Tpy	Max	Units
Input voltage range		3.0	3.3	3.6	V
Output voltage range	1mA < I_{LOAD} < 280mA	1.14	1.2	1.26	V
Max output current				280	mA
Load regulation	I_{LOAD} = 1mA to 280mA		5		mV
Input ripple rejection	V_{RIPPLE}=0.5V_{P-P} , I_{LOAD}=250mA, F_{RIPPLE}=120Hz F_{RIPPLE}=1MHz		 80 45		 dB dB
Output voltage noise	C_{OUT}=10uF, I_{LOAD}=250mA, BW=10Hz to 100kHz		150		μV_{rms}
Quiescent current	Power down mode			10	uA
Current limiting	Output short to ground		370		mA

6 Power on Reset Timing Requirement

The minimum delay time TD requirement is 2ms.

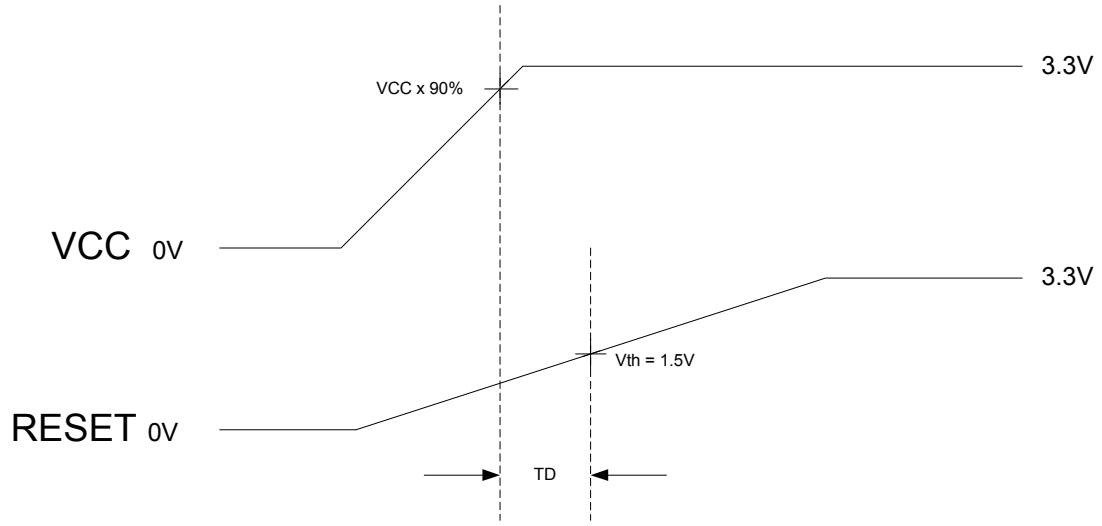

7 Crystal/Oscillator Specification

Parameters	Crystal	Oscillator
Frequency Range	25MHz	25MHz
Operation Mode	Fundamental	-
Operating Temperature	-10^0C to $+70^0$C	-10^0C to $+70^0$C
Overall Frequency Stability	± 50 ppm max	± 100 ppm max
Duty Cycle	-	45/55%@50%Vdd
Rise and Fall Time	-	4nS Max
Output Voltage	-	VOH = 0.9* Vcc min
	-	VOL = 0.1* Vcc max
Peak to Peak Jitter	-	32ps (Typical)
RMS Jitter		5ps max, cycle to cycle 20ps max, long term
Load Capacitor	9 pF (Typical)	

8 Packaging Specification

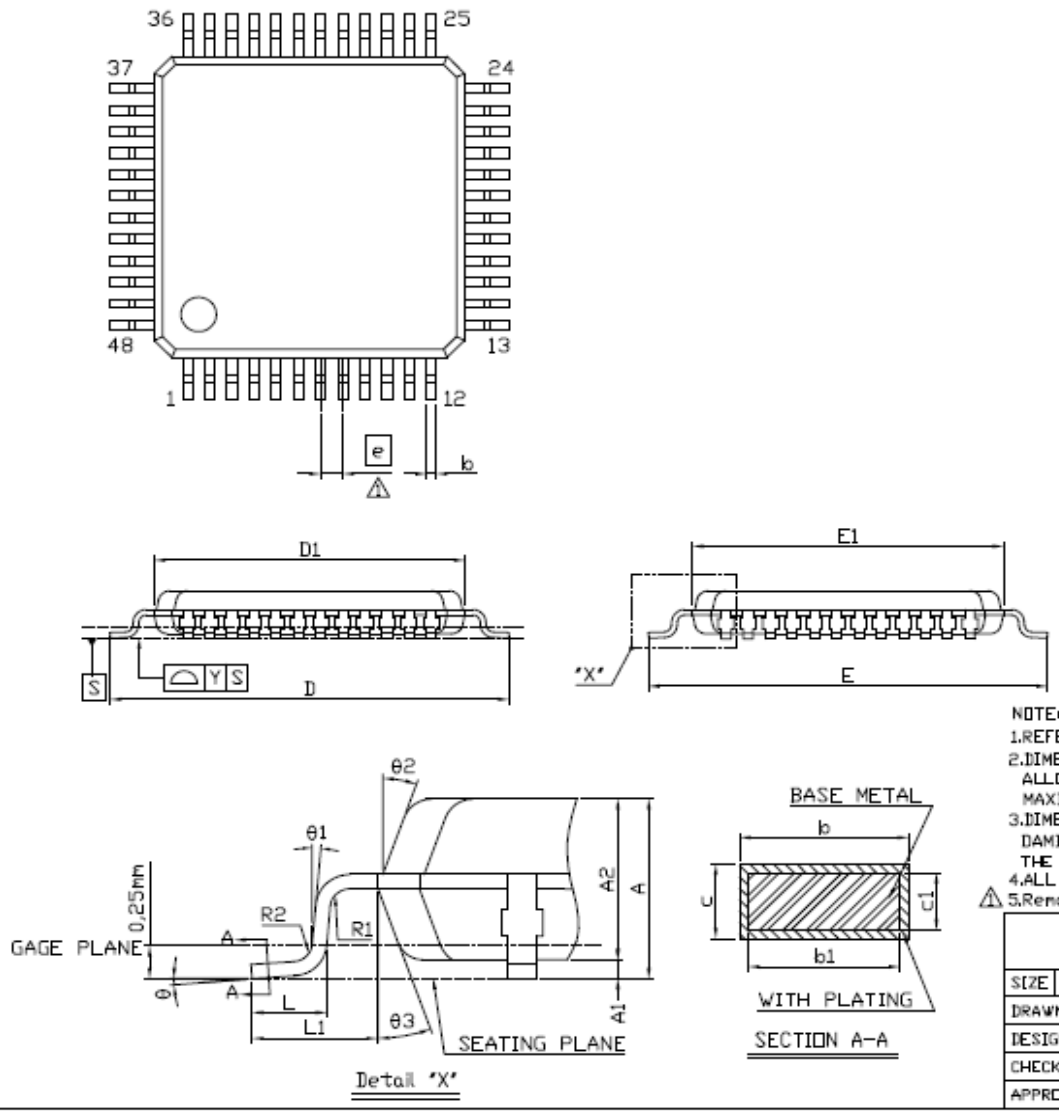

SYMBOL	DIMENSION (MM)			DIMENSION (MIL)		
	MIN.	NOM.	MAX.	MIN.	NOM.	MAX.
A			1.60			63
A1	0.05		0.15	2		6
A2	1.35	1.40	1.45	53	55	57
b	0.17	0.22	0.27	7	9	11
b1	0.17	0.20	0.23	7	8	12
c	0.09		0.20	4		8
c1	0.09		0.16	4		6
D	9.00 BSC			354 BSC		
D1	7.00 BSC			276 BSC		
E	9.00 BSC			354 BSC		
E1	7.00 BSC			276 BSC		
⚠ e	0.35	0.50	0.65	14	20	26
L	0.45	0.60	0.75	18	24	30
L1	1.00 REF			39 REF		
R1	0.08			3		
R2	0.08		0.20	3		8
Y			0.075			3
θ	0°	3.5°	7°	0°	3.5°	7°
θ1	0°			0°		
θ2	11°	12°	13°	11°	12°	13°
θ3	11°	12°	13°	11°	12°	13°

NOTE:
1.REFER TO JEDEC MS-026/BBC
2.DIMENSION D1 AND E1 DO NOT INCLUDE MOLD PROTRUSION. ALLOWABLE PROTRUSION IS 0.25mm PER SIDE D1 AND E1 ARE MAXIMUM PLASTIC BODY SIZE DIMENSION INCLUDING MOLD MISMATCH.
3.DIMENSION b DOES NOT INCLUDE DAMBAR PROTRUSION. ALLOWABLE DAMBAR PROTRUSION SHALL NOT CAUSE THE LEAD WIDTH TO EXCEED THE MAXIMUM b DIMENSION BY MORE THAN 0.08mm.
4.ALL DIMENSIONS IN MILLIMETERS.
⚠ 5.Remark: Modify e .

				PKG. CODE	DRAWING NUMBER	REV.
						4
SIZE	A3	BY	DATE	TITLE	LQFP48 (7x7mm) PACKAGE OUTLINE Footprint 2.0mm	
DRAWN			2005.09.06			
DESIGNED						
CHECKED				SCALE	10 : 1	PROJ.
APPROVED				SHEET	1 OF 1	

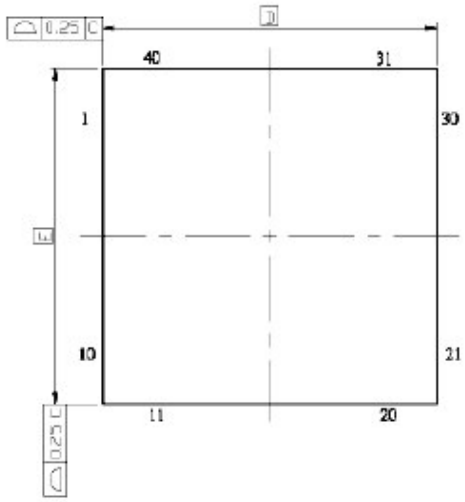

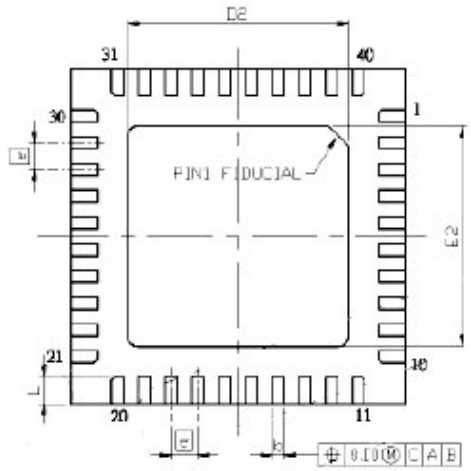

SYMBOL	DIMENSION (MM)			DIMENSION (MIL)		
	MIN.	NOM.	MAX.	MIN.	NOM.	MAX.
A	0.70	0.75	0.80	28	30	32
A1	0	0.02	0.05	0	0.8	2.0
A3	0.203 REF			8 REF		
b	0.15	0.20	0.25	6	8	10
D	4.90	5.00	5.10	193	197	201
D2	3.20	3.30	3.40	126	130	134
E	4.90	5.00	5.10	193	197	201
E2	3.20	3.30	3.40	126	130	134
e	0.40 BSC			16 BSC		
L	0.35	0.40	0.45	12	14	16
y			0.08			3

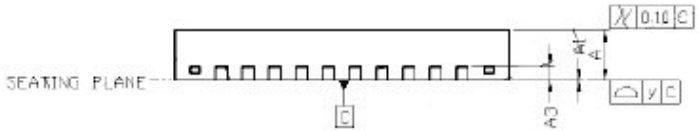

NOTE:

1. DIMENSIONING AND TOLERANCING CONFORM TO ASME Y14.5M-1994.
2. REFER TO JEDEC STD. MO-220 WHHE-1
3. LEADFRAME MATERIAL IS OLIN194 AND THICKNESS IS 0.203mm (8 MIL)

				PKG CODE	DRAWING NUMBER	REV
						-
SIZE	A3	BY	DATE	TITLE QFN40 (5x5x0.8mm) PACKAGE OUTLINE		
DRAWN						
DESIGNED						
CHECKED				SCALE	15 : 1	PROJ.
APPROVED				SHEET	1 OF 1	