Revision History

Revision	Date	Reason for redrawing	Page Update	Drawed	Checked	Approved
01A	0308Y16	Preliminary	--	Eason Chang	Austin Lin	

Model: SM2258XT-G144_2P5_T48X16_DB

Page1	Cover_Page
Page2	Controller_BGA144_2.5INCH
Page3	Power_Host_5V
Page4	NF_TSOP48x16 (CH0, CH1)
Page5	NF_TSOP48x16 (CH2, CH3)
Page6	Flash Mounting Guide

Silicon Motion, INC.

PageTitle	Cover Page
DOC.Number	<Doc>
Sch.FileName	SM2258XT-AB-G144_2p5_T48X16_D2_DB_V01
Rev	01A
Date:	Sunday, July 23, 2017
Sheet	1 of 7

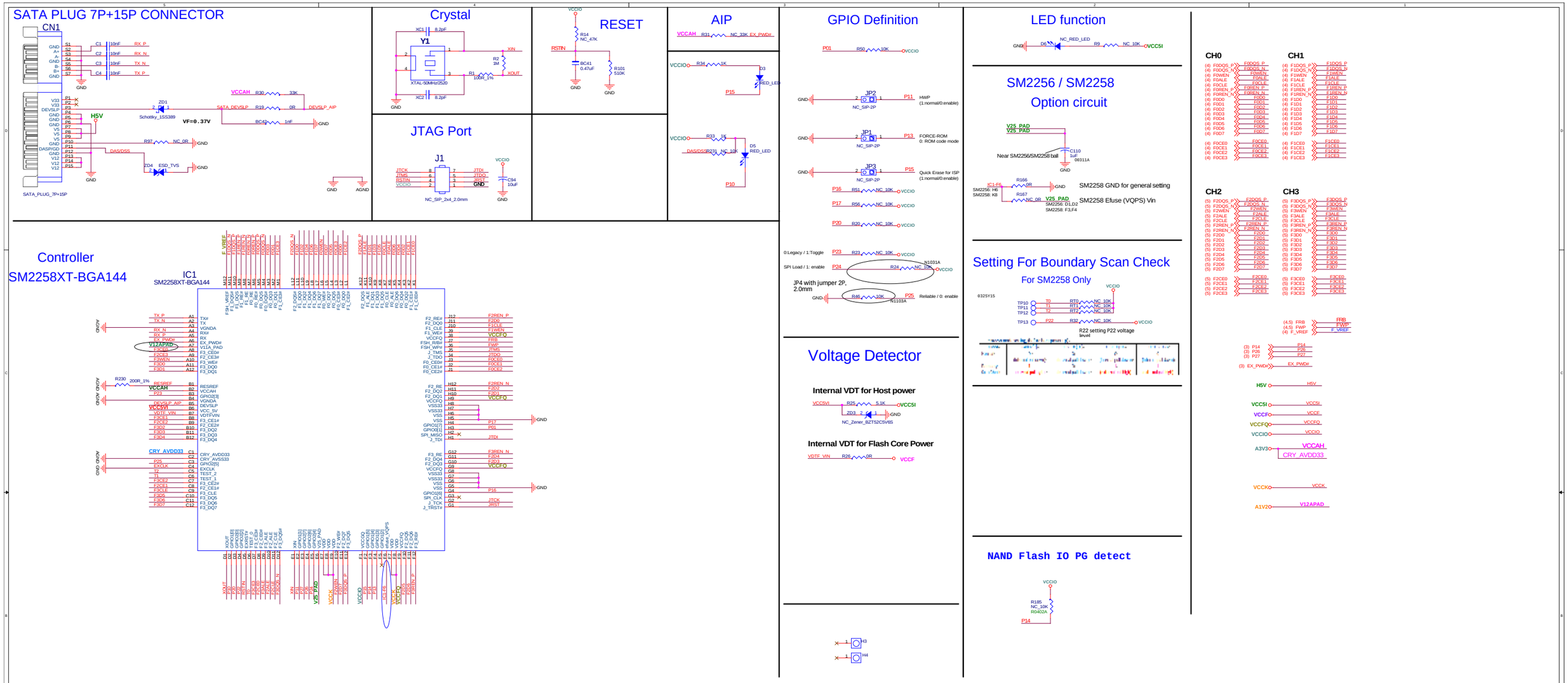

Silicon Motion, INC.

PageTitle	Main_2p5
DOC.Number	<Doc>
Sch.FileName	SM2258XT-AB-G144_2p5_T48X16_D2_DB_V01
Rev	01A
Date:	Sunday, July 23, 2017
Sheet	2 of 7

SM2258 Bypass Capacitors

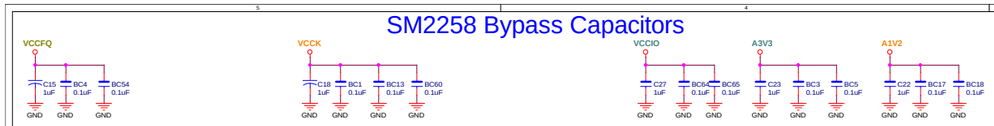

A3V3= 3.0 / 3.3 / 3.6 (V) For AIP power
A1V1=VDDTX_PHY=VDDRX_PHY= 1.1(V) For AIP power
VCCK = 1.1 (V) For SM2258AA core power
VCCIO = 3.3 / 1.8 (V) For General IO power
VCCF = 3.3 (V) For NAND flash Core Power
VCCFQ = 3.3 / 1.8 (V) For NAND flash IO Power

OVP Circuit

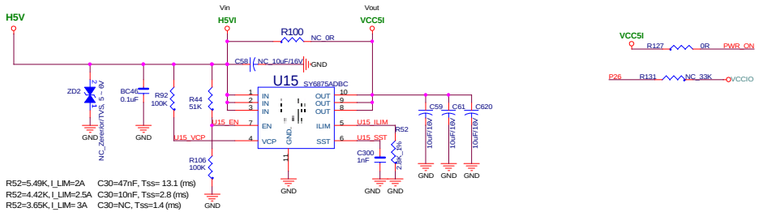

LDO_1: Analog Power 3.3V

PWM_2 for Flash Die Power 3.3V

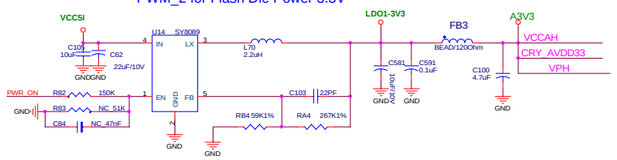

POWER

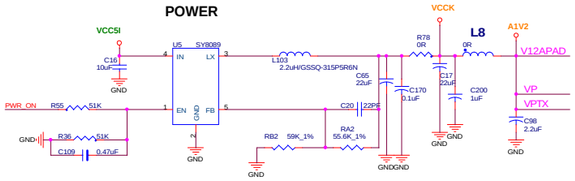

LDO_1: VCCIO Power 3.3V

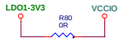

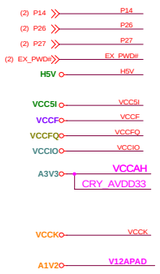

Top Flash 3.3V

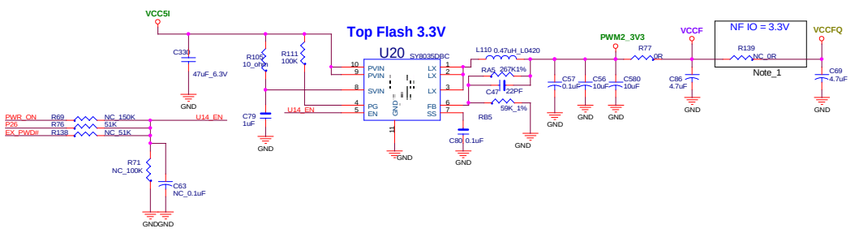

PWM_3 for Flash I/O 1.8V

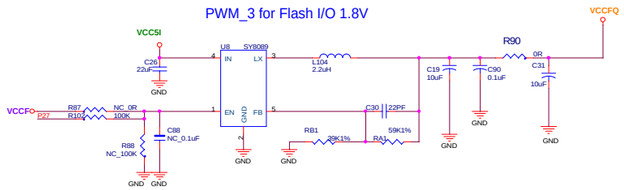

Silicon Motion, INC.

PageTitle	Power_Host_5V
DOC.Number	<Doc>
Sch.FileName	SM2258XT-AB-G144_2p5_T48X16_D2_DB_V01
Rev	01A
Date:	Sunday, July 23, 2017
Sheet	3 of 7

NAND Flash

Channel 0

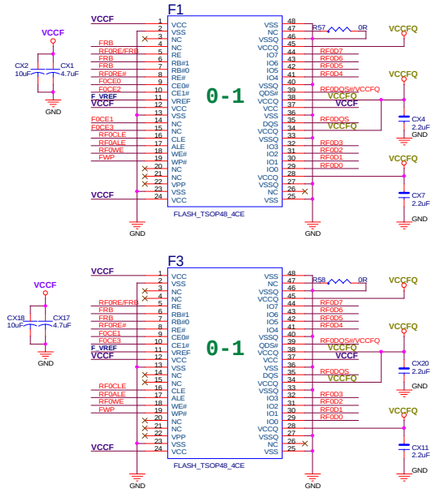

Channel 1

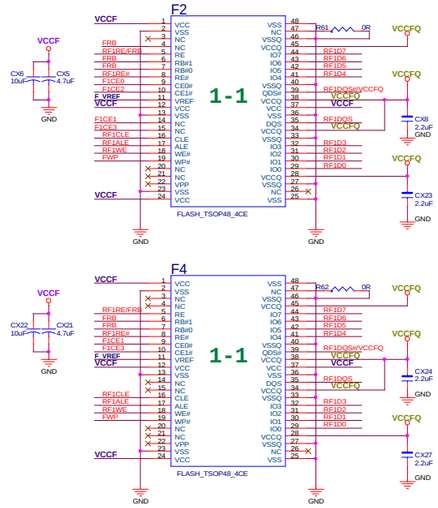

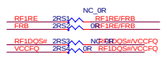

CH0

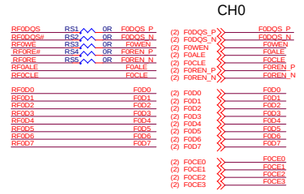

CH1

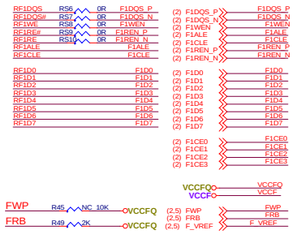

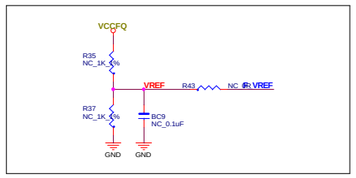

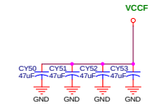

Silicon Motion, INC.

PageTitle	NF_TSOPx8 (CH0, CH1)
DOC.Number	<Doc>
Sch.FileName	SM2258G-AA-G323_2.5INCH_T48X16_D2_DB_V01
Rev	01A
Date:	Sunday, July 23, 2017
Sheet	4 of 7

NAND Flash

Channel 2

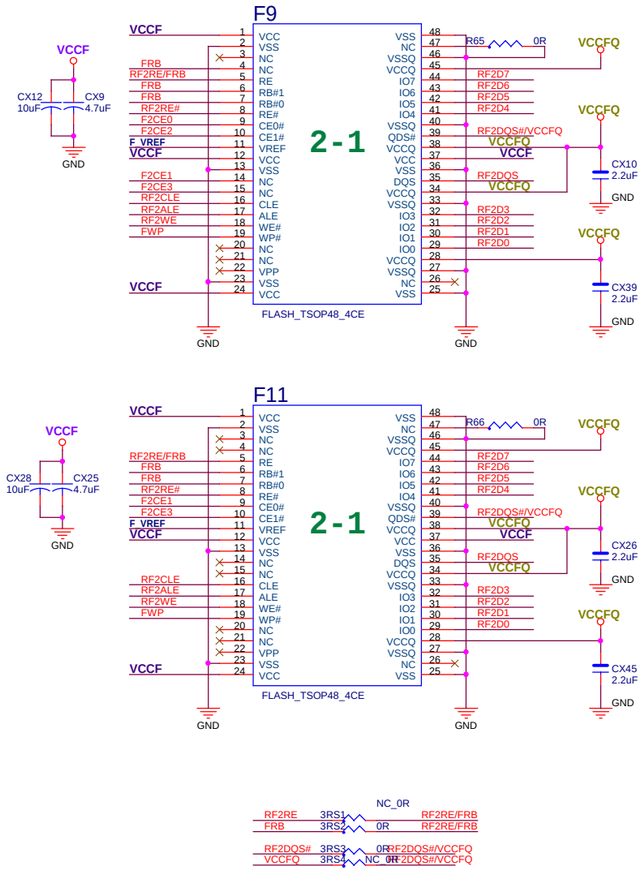

Channel 3

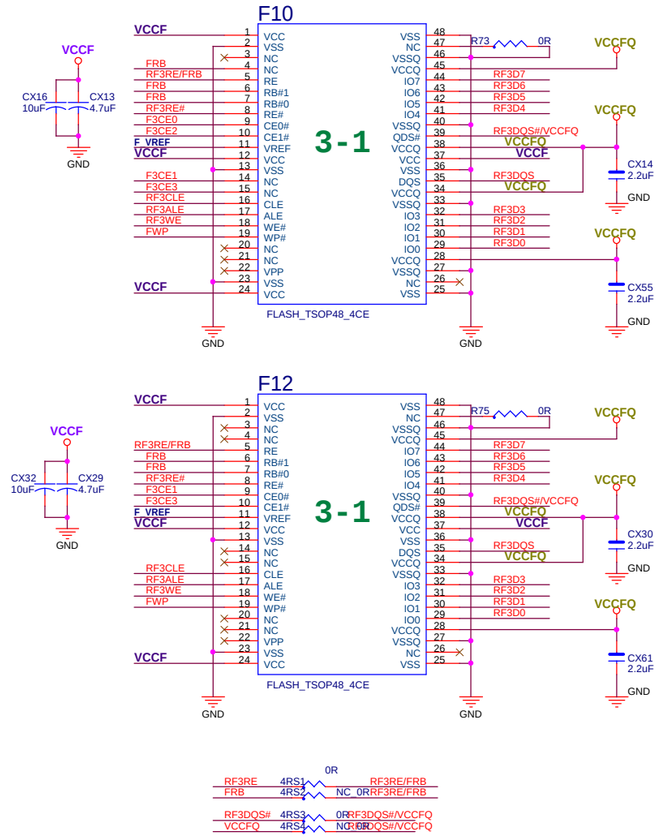

CH2

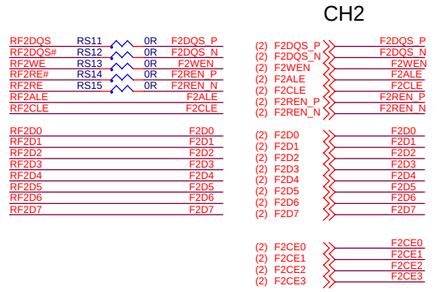

CH3

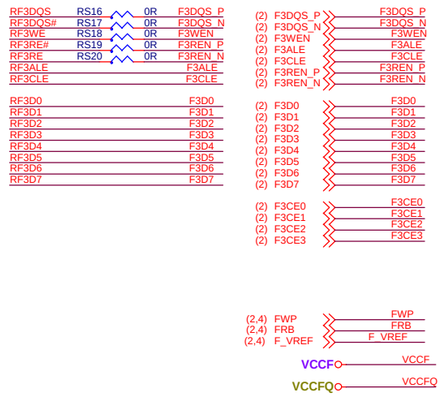

Silicon Motion, INC.	
PageTitle	NF_TSOPx8 (CH2, CH3)
DOC.Number	<Doc>
Sch.FileName	SM2258G-AA-G323_2.5INCH_T48X16_D2_DB_V01 — Rev 01A
Date: Sunday, July 23, 2017	Sheet 5 of 7

NAND FLASH Mounting Guide

2.5INCH BGA152x16 NAND Flash Mounting Guide

NAND Flash Type	F1	F2	F3	F4	F5	F6	F7	F8	F9	F10	F11	F12	F13	F14	F15	F16	NF Config.	RCE1	RCE2	RCE3	RCE4	RCE5	RCE6	RCE7	RCE8	RCE9	RCE10	RCE11	RCE12	RCE13	RCE14	RCE15	RCE16	CE useage
Single CE flash x1	◎	X	X	X	X	X	X	X	X	X	X	X	X	X	X	X	1CH/1CE	△	△	△	△	△	△	△	△	△	△	△	△	△	△	△	△	CE0
Single CE flash x2	◎	◎	X	X	X	X	X	X	X	X	X	X	X	X	X	X	2CH/1CE	△	△	△	△	△	△	△	△	△	△	△	△	△	△	△	△	CE0
Single CE flash x3	◎	◎	X	X	X	X	X	X	◎	X	X	X	X	X	X	X	3CH/1CE	△	△	△	△	△	△	△	△	△	△	△	△	△	△	△	△	CE0
Single CE flash x4	◎	◎	X	X	X	X	X	X	◎	◎	X	X	X	X	X	X	4CH/1CE	△	△	△	△	△	△	△	△	△	△	△	△	△	△	△	△	CE0
Single CE flash x8	◎	◎	X	X	◎	◎	X	X	◎	◎	X	X	◎	◎	X	X	4CH/2CE	△	△	△	△	△	△	△	△	△	△	△	△	△	△	△	△	CE0,CE4
Single CE flash x16	◎	◎	◎	◎	◎	◎	◎	◎	◎	◎	◎	◎	◎	◎	◎	◎	4CH/4CE	△	△	△	△	△	△	△	△	△	△	△	△	△	△	△	△	CE0,CE2,CE4,CE6
Dual CE flash x1	◎	X	X	X	X	X	X	X	X	X	X	X	X	X	X	X	2CH/1CE	X	◎	△	△	△	△	△	△	△	△	△	△	△	△	△	△	CE0
Dual CE flash x2	◎	◎	X	X	X	X	X	X	X	X	X	X	X	X	X	X	2CH/2CE	◎	X	△	△	△	△	△	△	△	△	△	△	△	△	△	△	CE0,CE1
Dual CE flash x2	◎	X	X	X	X	X	X	X	◎	X	X	X	X	X	X	X	4CH/1CE	X	◎	X	◎	△	△	△	△	△	△	△	△	△	△	△	△	CE0
Dual CE flash x4	◎	◎	X	X	X	X	X	X	◎	◎	X	X	X	X	X	X	4CH/2CE	◎	X	◎	X	△	△	△	△	△	△	△	△	△	△	△	△	CE0,CE1
Dual CE flash x8	◎	◎	X	X	◎	◎	X	X	◎	◎	X	X	◎	◎	X	X	4CH/4CE	◎	X	◎	X	△	△	△	△	△	△	△	△	△	△	△	△	CE0,CE1,CE4,CE5
Dual CE flash x16	◎	◎	◎	◎	◎	◎	◎	◎	◎	◎	◎	◎	◎	◎	◎	◎	4CH/8CE	◎	X	◎	X	△	△	△	△	△	△	△	△	△	△	△	△	CE0,CE1,CE2,CE3 CE4,CE5,CE6,CE7
																										△	△	△	△	△	△	△	△	
Quad CE flash x1	◎	X	X	X	X	X	X	X	X	X	X	X	X	X	X	X	2CH/2CE	X	◎	△	△	X	◎	△	△	△	△	△	△	△	△	△	△	CE0,CE2
Quad CE flash x2	◎	◎	X	X	X	X	X	X	X	X	X	X	X	X	X	X	2CH/4CE	◎	X	△	△	◎	X	△	△	△	△	△	△	△	△	△	△	CE0,CE1,CE2,CE3
Quad CE flash x2	◎	X	X	X	X	X	X	X	◎	X	X	X	X	X	X	X	4CH/2CE	X	◎	X	◎	X	◎	X	◎	△	△	△	△	△	△	△	△	CE0,CE2
Quad CE flash x4	◎	◎	X	X	X	X	X	X	◎	◎	X	X	X	X	X	X	4CH/4CE	◎	X	◎	X	◎	X	◎	X	△	△	△	△	△	△	△	△	CE0,CE1,CE2,CE3
Quad CE flash x8	◎	◎	X	X	◎	◎	X	X	◎	◎	X	X	◎	◎	X	X	4CH/8CE	◎	X	◎	X	◎	X	◎	X	△	△	△	△	△	△	△	△	CE0,CE1,CE2,CE3 CE4,CE5,CE6,CE7
8 CE flash x1	◎	X	X	X	X	X	X	X	X	X	X	X	X	X	X	X	2CH/4CE	X	◎	X	◎	X	◎	X	◎	△	△	△	△	△	△	△	△	CE0,CE2,CE4,CE6
8 CE flash x2	◎	X	X	X	X	X	X	X	◎	X	X	X	X	X	X	X	4CH/4CE	X	◎	X	◎	X	◎	X	◎	X	◎	X	◎	X	◎	X	◎	CE0,CE2,CE4,CE6
8 CE flash x4	◎	◎	X	X	X	X	X	X	◎	◎	X	X	X	X	X	X	4CH/8CE	◎	X	◎	X	◎	X	◎	X	◎	X	◎	X	◎	X	◎	X	CE0,CE1,CE2,CE3 CE4,CE5,CE6,CE7

M1023A

◎	Install
X	un-install
△	Don't care (it is fine if resistor mouning or not.)

TOP View For Flash PCB Placement

CH0 / CH1: F1 ~ F8

CH2 / CH3: F9 ~ F16

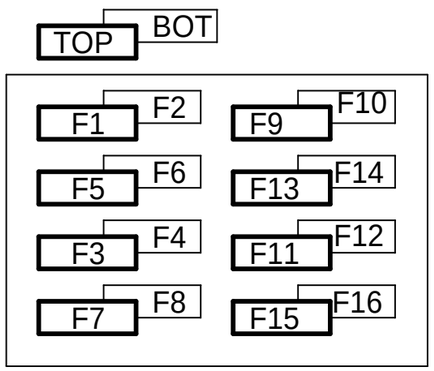

Silicon Motion, INC.

PageTitle	NF_Mounting_Guide
DOC.Number	<Doc>
Sch.FileName	SM2258XT-AB-G144_2p5_T48X16_D2_DB_V01
Rev	01A
Date:	Sunday, July 23, 2017
Sheet	7 of 7